AMTECH

(WE RESERVE THE RIGHT TO CHANGE DESIGN AND TECHNICAL DATA FURNISHED HERE DUE TO CONTINUOUS PRODUCT DEVLOPMENT.)

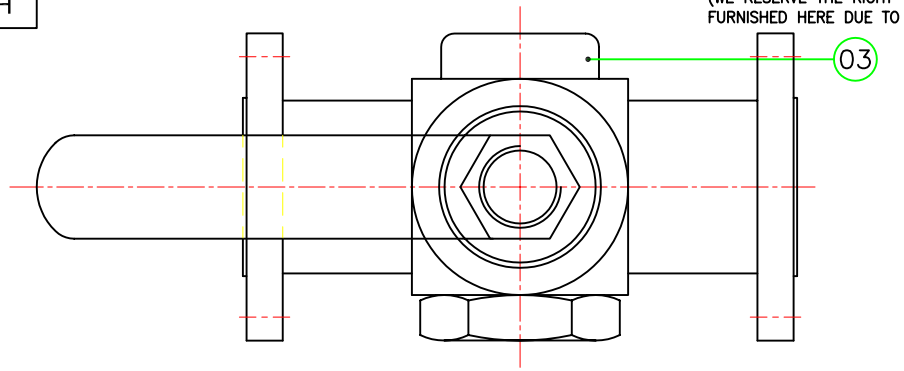

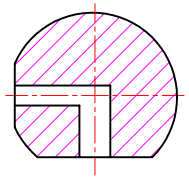

L PORT
BALL DESIGN

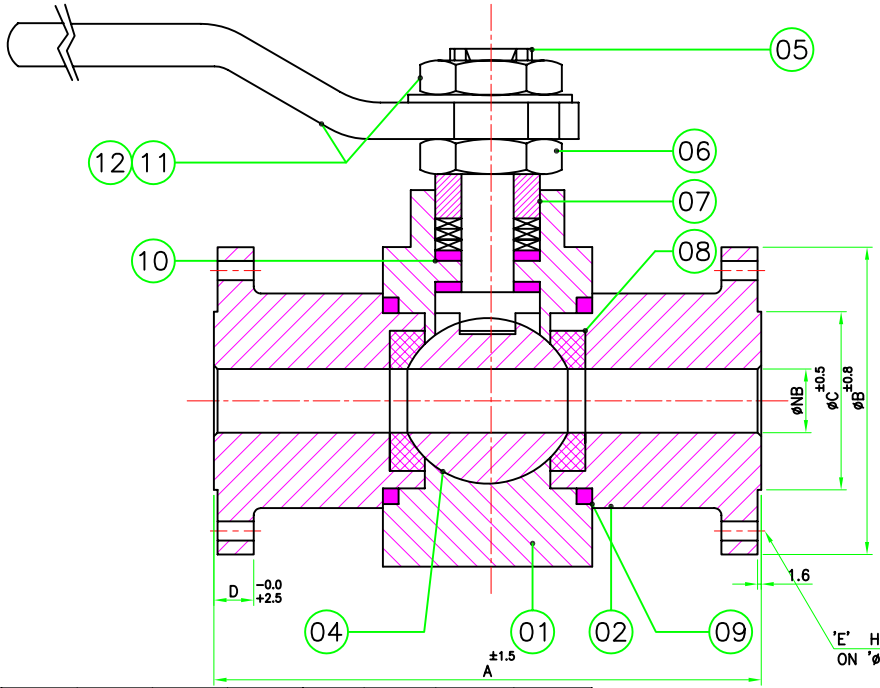

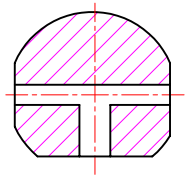

T PORT
BALL DESIGN

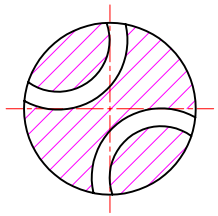

DOUBLE L PORT
BALL DESIGN

NO.	DESCRIPTION	QTY.	MATERIAL
1	BODY	1	ASTM B 216 Gr. WCB
			C.I. TO IS 210 Gr. FG 220
			AISI 304 OR CF8 (I.C.)
			AISI 316 OR CF8M (I.C.)
2	BODY CONNECTOR	1	ASTM B 216 Gr. WCB
			C.I. TO IS 210 Gr. FG 220
			AISI 304 OR CF8 (I.C.)
			AISI 316 OR CF8M (I.C.)
3	BODY END CAP	1	ASTM B 216 Gr. WCB
			C.I. TO IS 210 Gr. FG 220
			AISI 304 OR CF8 (I.C.)
			AISI 316 OR CF8M (I.C.)
4	BALL	1	AISI 304 / AISI 316
5	STEM	1	AISI 304 / AISI 316
6	GLAND NUT	1	AISI 304 / AISI 316
7	GLAND BUSH	1	AISI 304 / AISI 316
8	SEAT RING	4	PTFE OR FILLED PTFE
9	BODY SEAL	4	PTFE OR FILLED PTFE
10	STEAM SEAL	2	PTFE OR FILLED PTFE
11	LOCK NUT	1	C.S./S.S.304/S.S.316
12	LEVER	1	M.S./S.S.304/S.S.316

PRESSURE TEST (HYDRAULIC):-

150#	
BODY :– 32 KG/CM2 (g) SEAT :– 22 KG/CM2 (g) SEAT (PNEUMATIC) :– 7 KG/CM2 (g)	

SIZE	NB	A	ØB	ØC	D	E	ØF	ØG	L
150#									
80	76	203	190	127	23.87	4	19	152	350
65	63	190	178	104	22.35	4	19	140	350
50	49	178	152	92	19.05	4	19	120	300
40	49	165	127	73.15	17.5	4	16	98.6	225
32	49	140	117.4	63.5	15.8	4	16	88.9	150
25	23	127	108	50.8	14.2	4	16	79	150
20	19	117	98.6	42.9	12.7	4	16	69.9	150
15	12	108	88.9	35.0	11.2	4	16	60.5	150

UNSPECIFIED TOLERANCE FOR MACHINED DIM.			
0–75	75–300	300–600	ABOVE 600
± 0.2	± 0.4	± 0.6	± 0.75

RATING	SIZE
150 #	15 TO 80 (mm)
END CONNECTION	STANDARD
FLANGE END	–

DESCRIPTION

3 WAY & 4 WAY BALL VALVE SCREW END

ALL DIMENSIONS ARE IN M.M.
UNLESS OTHERWISE SPECIFIED
REMOVE SHARP CORNERS

MATERIAL
AS STATED

MANUFACTURER'S & EXPORTER
M.KUMAR TECHNOCRATES
SR/9,RAMBHA COMPLEX, ASHRAM ROAD,
AHMEDABAD – 380 014.(GUJARAT) INDIA
Phone:–0091–79–27540287.
Fax:–0091–79–27545519.
E–mail–info@amtechvalves.com
Website:–http://www.amtechvalves.com

SCALE	N.T.S.	GHV	–
VALVE TYPE		CHD.	DATE
BALL VALVE		–	–
PROJECTION		APPD.	DATE
THIRD ANGLE		–	–
SHEET No.	DRW. No.		REV.
01 OF 01	AMTECH		00